2. STARTING SYSTEM

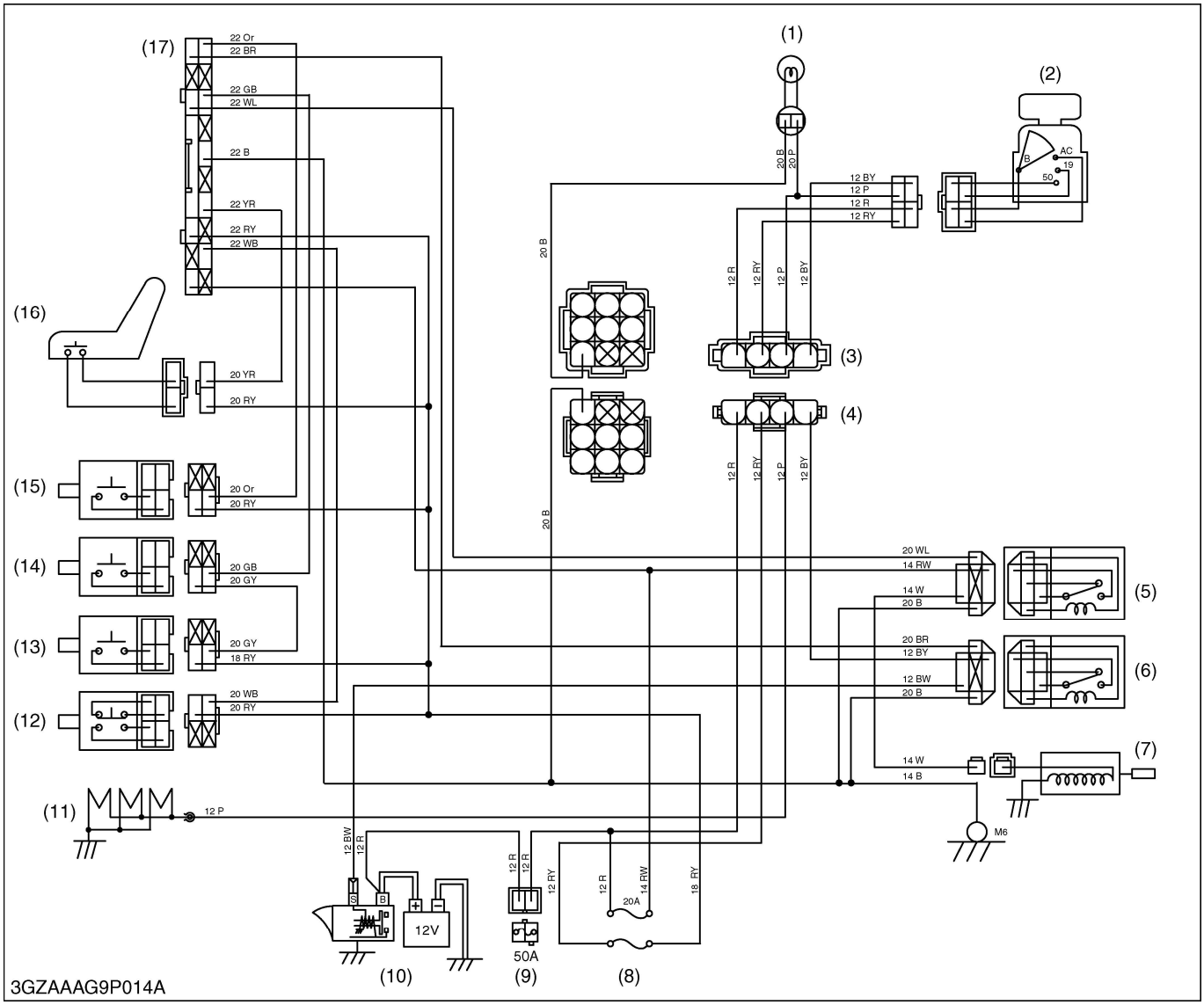

(1) Glow Lamp	(6) Starter Relay	(10) Starter	(14) Safety Switch (LH)
(2) Starter Switch	(7) Solenoid	(11) Glow Plug	(15) PTO Switch
(3) Harness A	(8) Fuse	(12) Brake Switch	(16) Seat Switch
(4) Harness B	(9) Slow Blow Fuse	(13) Safety Switch (RH)	(17) Controller
(5) Solenoid Relay			

When the main switch is turned to the **PREHEAT** position, the terminal **B** is connected to the terminals **19** and **AC**. The glow plugs become red-hot, and the preheat indicator lamp also lights on while preheating.

When the main switch is then turned to the **START** position with the safety switches on, the terminal **B** is connected to the terminals **50** and **AC**. Consequently, battery current flows to the starter motor and start the engine.

The main switch automatically returns to the **ON** position, the terminal **B** is connected only to the terminal **AC**, thereby causing the starting circuit to be opened, stopping the starter motor.

When the main switch turned from the **ON** position to the **OFF** position, the fuel cut-off solenoid moves the fuel injection pump control rack to the **"No Fuel Injection"** position and stop the engine.

9Y1210265ELM0002US0